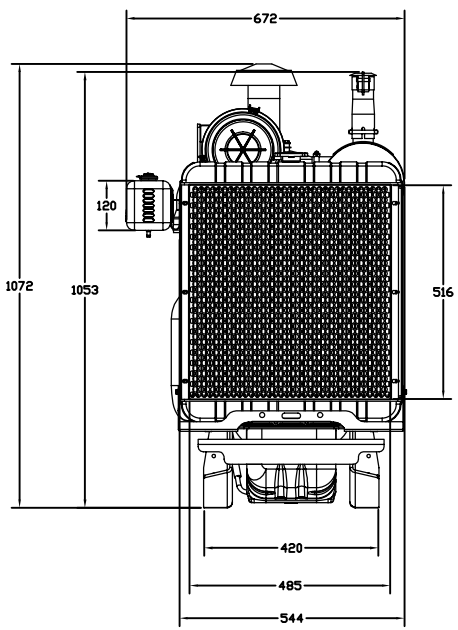

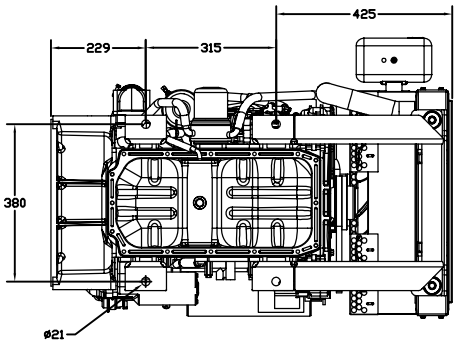

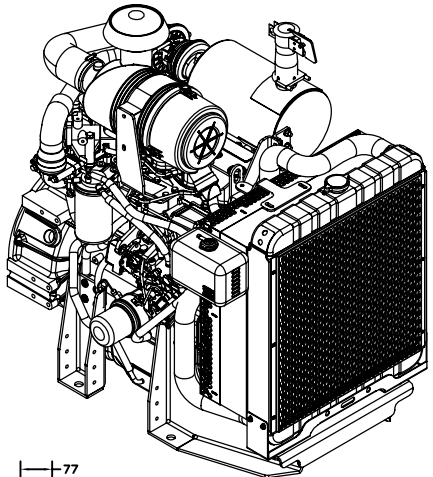

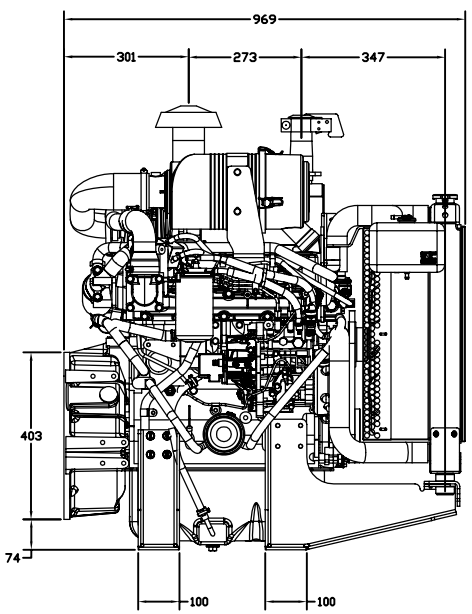

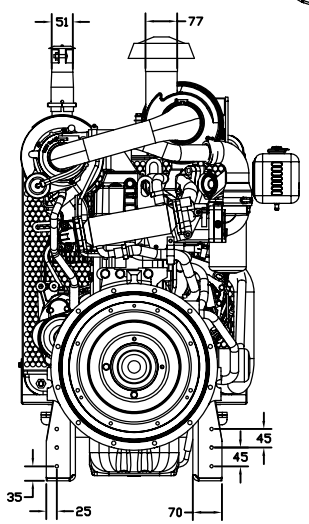

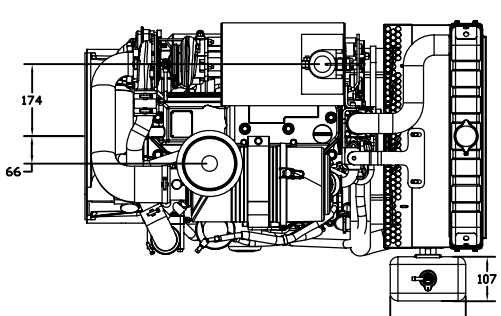

UNLESS OTHERWISE SPECIFIED DIMENSIONS ARE IN MILLIMETERS SURFACE FINISH TOLERANCES LINEAR ANGULAR	FINISH	DEBUR AND BREAK SHARP EDGES	DO NOT SCALE DRAWING	REVISION
			YANMAR CO., LTD. YANMAR AMERICA CORP	

	NAME	SIGNATURE	DATE
DRAWN			
CHK'D			
APPV'D			
MFG			
Q.A.			

MATERIAL:

WEIGHT:

TITLE:

DWG NO 4TNV98T-ZNSA A1

SCALE:NR SHEET 1 OF 1